EDU™ SERIES

Ductless Demonstration Fume Hoods

"The World's Most Extensive Selection of Ductless Fume Hoods."

DOCKING STATION OPTION

— EDU-M-40

Now available with Utility Docking Station.

EDU™ Series Ductless Fume Hoods are Safe for Education, Vocational Training and Industrial Workforce Development

Meets or Exceeds OSHA, ANSI and other International Standards.

Air Science®

GSA Schedule

EDU™ SERIES Ductless Demonstration Fume Hoods

JUMP TO:

Features and Callouts (p.3)

EDU™ Controller Options (p.4)

Airflow and Multiplex™ Filtration Technology (p.6)

Specifications (p.10)

Options and Accessories (p.13)

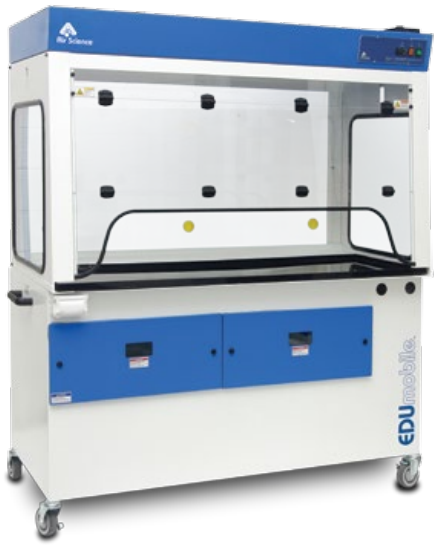

EDU™ SERIES

Ductless Demonstration Fume Hoods

- *Offers 360° visibility for full participation.*
- *Protects the class from toxic fumes.*
- *Available in four models to meet general applications.*
- *Filters are easy to change.*
- *Improved filter clamping prevents bypass leakage.*
- *Low airflow alarm warns of unsafe conditions.*
- *Compliant with ANSI, OSHA, AFNOR and BSI safety standards.*
- *Portable unit with transparent front, back and side walls for maximum visibility. The EDU series offers personnel and environmental protection, optimal energy savings and zero toxic emissions to the room.*
- *EDU-MOBILE, EDU-M-60 shown*

APPLICATIONS

- Science Class Lectures
- Safety Practice Demonstrations
- Laboratory Assignments

INTRODUCTION

The EDU Series Ductless Demonstration Fume Hoods are designed for individual and group applications where clear front, side and rear walls permit 360° visibility. The high efficiency carbon filtration and air management system protects both the user and the classroom environment from hazardous vapors generated on and above the work surface. The EDU series units are mounted on heavy-duty transfer carts and are sized to fit through standard doorways for easy transportation from lab to lab.

EDU Series Differential Features

Differential features within the EDU series are summarized below for easy selection.

Construction

- The cabinet exterior is 100% made in the U.S.A., fabricated with an epoxy-coated steel superstructure around clear front, side and rear panels.
- The front safety panels lift up on hinges for easy access to the interior.
- Locking casters permit complete portability from lab to lab.
- The overall width and height are sized to fit easily through standard doorways.
- A cart handle is located at each end to simplify moving (EDU-MOBILE and EDU-CLASSIC models only).
- Internal fluorescent lamps operate from the main power switch.

Docking Station

Prevents accidental disconnect of services to mobile fume hoods and prevents unauthorized access to main service connections which are securely locked away when not in use. Features include:

- Professional Construction
- Key Locked
- Recess or flush wall or bench mounted versions available
- Isolated single switch electrical sockets (13 amp)
- Quick release connections for: water, waste, and gas
- Optional RJ45 outlet

Made in the U.S.A.

This Product Exceeds OSHA, ANSI and Other International Standards.

PRODUCT FEATURES:

A. **Control Panel:** Electronic controls and displays include switches for the blower and low airflow alarm.

B. **Power Inlet:** (right side, top)

C. **Air Velometer:** An analog air velocity meter in the field of vision of the user.

D. **Gas Petcock:** (optional)

E. **Gooseneck Water Faucet:** (optional)

F. **Cup Sink:** (optional) Integrated polypropylene cup sink.

G. **Internal Diffuser**

H. **Integrated Centrifugal Fan Motor/Blower Assembly**

I. **Front Access:** Multiplex™ filtration system, with filter clamp system.

J. **Electrostatic Pre-Filter:** The 99.5% effective electrostatic pre-filter is accessible from inside the chamber to contain the release of any particulates that it traps.

K. **Internal Manual Speed Controller:** Authorized personnel set the centrifugal fan motor speed as desired.

L. **Internal Fluorescent Lamp**

M. **Duplex Electrical Outlet:** (optional) Externally mounted.

N. **Airflow Alarm:** A continuous air velocity monitoring system alerts the operator upon unacceptable values.

O. **Main Controls:** Petcock and water faucet controls.

P. **Cart Handle:** Located on the left and right sides of the EDU-MOBILE and EDU-CLASSIC models.

Q. **Filter I.D. Window:** A strategically placed front cover window shows the installed filter part number and installation date for convenience and to encourage timely filter replacement.

R. **Work Surface:** The internal work surface is fitted with an optional polypropylene tray.

S. **Pass Through Ports:** Electrical cords and cables are safely routed into the cabinet through ports on the back and side walls.

T. **Double-Hinged Self-Locking Front Sash:** When closed, the cabinet sash protects the operator with 100 FPM airflow. The sash is easy to open and latch.

OTHER FEATURES:

360 Degree Visibility: Clear back and side panels allow ambient illumination into the chamber and provide users with an unobstructed view of its contents.

Standards Compliant: Performance specifications and construction meet or exceed OSHA, ANSI and relevant international standards to assure operator safety.

Construction: All models are available in either metal or polypropylene construction. See selection chart for specifications and dimensions.

Integrated Control Panel: Easy reference to critical information with built-in audible and visual alarms for low airflow and filter use elapsed time.

No Installation, No Ducting Required: Self-contained, integrated systems ideal for fixed location or mobile applications.

Safe, Energy-Efficient Operation: All conditioned air is safely returned to the room, minimizing impact on facility HVAC costs.

EDU-MOBILE, EDU-M-40 shown

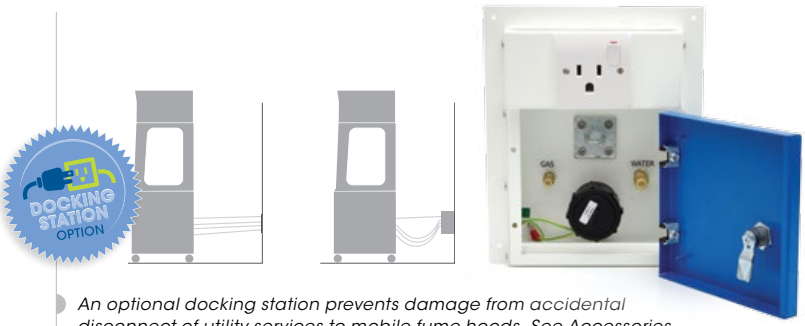

An optional docking station prevents damage from accidental disconnect of utility services to mobile fume hoods. See Accessories.

THE AIR SCIENCE PERFORMANCE ADVANTAGE

Each Air Science fume hood includes features expressed through sound design and certified quality construction. Options and accessories add functional performance to meet specific applications.

Professional Quality. Air Science fume hoods comply with current technical and safety regulations.

Multiplex Filtration. The Air Science Multiplex filter offers a range of options for high performance protection.

Industrial Components. The cabinet frame and work surfaces are durable and chemically resistant.

Reliability. Internal systems are isolated from fumes, extending product life.

Air Science fume hoods use energy-efficient ebmpapst™ brand centrifugal blowers for long life, and dependable performance.

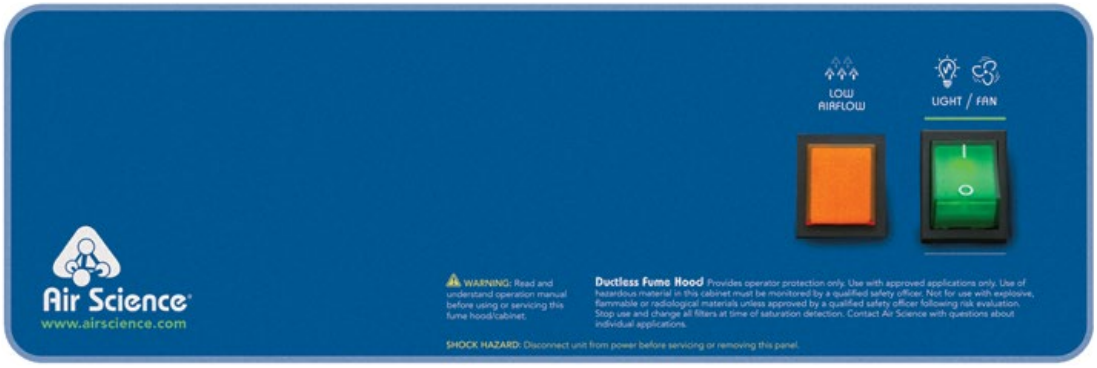

*The EDU Series **Basic** control panel. Standard on EDU-JUNIOR, Includes On/Off switch and low airflow alarm.*

*The **Advanced** control panel includes an On/Off switch, low airflow alarm and hour meter to aid in determining available filter life. Standard on EDU-MOBILE, EDU-CLASSIC, and EDU-ADA.*

*An electronic **Filter Saturation Alarm (FSA)** is available with the optional **Advanced** control panel. In addition to all the features of the **Advanced** control panel the **FSA** adds an electronic gas sensor and emits audio and visual alerts when the main filter needs to be changed.*

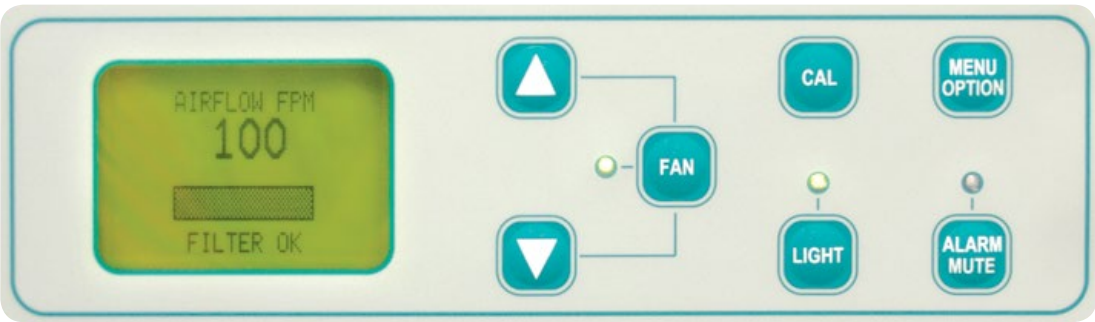

*The optional **Monitair** microprocessor controller monitors and displays cabinet operating parameters, airflow, containment, and filter condition; emits audio and visual alerts if conditions become unsafe all on a LCD display.*

EDU SERIES DIFFERENTIAL SUMMARY

Feature	EDU-MOBILE	EDU-CLASSIC	EDU-ADA	EDU-JUNIOR
General Description	Mounted on wheeled cart with small side storage cabinet. Blowers, filters and controls are mounted below the work surface to lower the center of gravity.	Mounted on a wheeled cart with an enclosed chemical storage area in the base cabinet.	Provides wheelchair access to the workstation front. Controls are mounted in a handheld remote box placed inside the workzone.	A basic workstation, mounted on wheeled cart.
Airflow	↓	↑	↑	↑
Air Sampling Port	•	•	•	
Base Cabinet	•	•		
Dynamic Filter Chamber	•	•	•	
Airflow Alarm	•	•	•	•
Hour Counter	•	•	•	
Optional Service Fixtures, Cup Sink	•	•	•	•
Push/Pull Handle	•	•		
Dwyer Continuous Airflow Display	•	•	•	•
Safety Filter	•	•	•	
Storage Compartment	•	•		
Track and Wheel Filter Insert/Remove Function	•	•	•	

Controls

An integrated control module located above the work surface puts all controls at eye level.

- A main On/Off switch controls power to the airflow system and lights.
- The electronic alarm system includes a low airflow indicator which warns of insufficient air velocity through the main filter.
- Electronic process monitoring assures continuous safety; an optional electronic gas sensor monitors main carbon filter performance.
- A manually adjustable blower speed controller compensates for filter loading.
- A high-performance ebmpapst™ centrifugal fan provides continuous air velocity while the cabinet is in operation.
- A velometer located on the cabinet side offers a visual confirmation of air velocity.

Utilities

- Optional petcocks are available for gas and water.
- Duplex power outlets are mounted outside the work area on the cabinet front.
- Optional gooseneck faucet is positioned over an optional chemically-resistant polypropylene sink cup integrated into the work surface.
- Pass-thru ports are located near the cabinet work tray on the left and right.
- Operates on either 120V, 60Hz or 230V, 50Hz electrical service.

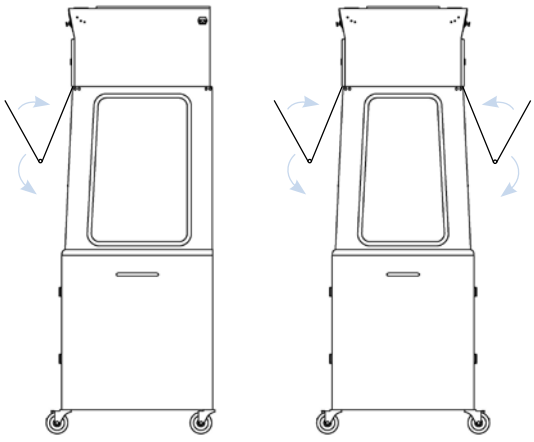

Single Access

Dual Access

For applications where student access is required, units can be fitted with dual access front and rear.

CHEMICALS ABSORBED,
EDU Activated Carbon Filter (abbreviated list)

Inorganic Fumes:

- *Aluminum Chloride and Bromide*
- *Ammonia*
- *Ammonium Chloride Fumes*
- *Bromine*
- *Chlorine*
- *Chromium (V1) Dichloride Dioxide*
- *Chromyl Chloride*
- *Hydrogen Acid Vapor*
- *Hydrogen Sulphide*
- *Iodine*
- *Iodine Chlorides*
- *Lead*
- *Lead Bromide*
- *Mercury and its Compounds*
- *Nitric Acid Vapor*
- *Nitrogen Oxides (Acidic)*
- *Phosphine*
- *Phosphorus Chlorides and Bromides*
- *Phosphorous Oxides*
- *Silicon Tetrachloride*
- *Sulphur Chloride*
- *Sulphur Dioxide*
- *Thionyl Chloride*
- *Tin (IV) Chloride*
- *Titanium Tetrachloride*
- *Zinc Chloride Fumes*

Organic Fumes:

- *Acid Amides*
- *Acid Anhydrides*
- *Acid Chlorides*
- *Acidic Nitrogen Oxide*
- *Alcohols*
- *Aldehydes*
- *Aliphatic Amines and their Salts*
- *Aliphatic Hydrocarbons*
- *Aromatic Amines and Aromatic Hydrocarbons*
- *Aromatic Nitro Compounds*
- *Carboxylic Acids*
- *Esters*
- *Ethers*
- *Ketones*
- *Nitriles*
- *Organo Halogens*
- *Phenols*
- *Pyridine*
- *Dust and Particles*
- *Dyes*
- *Enzymes*
- *Smoke*

Warning—*Exclusions: This filter will not absorb hydrogen, carbon monoxide, nitrous oxide or methane.*

multiplex™

THE AIR SCIENCE MULTIPLEX FILTRATION TECHNOLOGY SYSTEM

The Multiplex filtration system consists of a pre-filter, main filter and optional safety filter to create a combination of chemical and physical architecture customized to each application.

The mechanical design enhances safety, convenience and overall value.

- The electrostatic pre-filter is accessible from within the cabinet.
- A filter clamping mechanism allows for the filter to be easily installed and ensures an even seal at the filter peripheral face at all times to prevent bypass leakage.
- The filter chamber prevents contaminated air from contacting internal cabinet mechanisms.
- The main filter number and installation date are displayed in a front-access window.

The Air Science carbon filtration technique is based on enhanced, activated carbon particle formulations from specially selected, naturally occurring raw material superior to wood or other organic sources. The carbon is treated to attain the proper porosity and aggregate surface area and to react with several ranges of aerosolized chemicals moved through the filter by an air handling blower.

- The multiplex option permits one or more filtration options to be combined to meet a wider range of multiple-use applications. Multiplexing permits configuration for the capture of acids, bases and particulates such as biological aerosols when paired with HEPA or ULPA filters.
- The Air Science carbon filter is a self-contained assembly sized to fit the specified product model number. It is configured to optimize airflow across 100% of the filter surface area for maximum efficiency, prolonged filter life, optimal diffusion and saturation capacity, and user safety.

Air Science is the single source supplier for all pre-filters and carbon filters used in its products, plus those of many other manufacturers worldwide.

MULTIPLEX FILTRATION SYSTEM SUMMARY

	EDU-MOBILE	EDU-CLASSIC	EDU-ADA	EDU-JUNIOR
Pre-Filter				
Electrostatic	Protects the main filters from aerosols, mists, dust and particulates with filter efficiency superior to 99.5% down to 0.5 microns.			
	Standard	Standard	Standard	Standard
Main Filter				
Molecular	FILTCO™ Sourced. A single carbon filter containing activated carbon granules chemically formulated to capture one or more specific vapors or family of vapors.			
Single: One type of activated carbon, typically EDU formula.	Specify	Specify	Specify	Specify
Blended: A single filter with two or more types of carbon blended throughout.	Specify	Specify	Specify	--
Layered: A single filter with two or more types of carbon in separate layers.	Specify	Specify	Specify	--
Stacked: Two or more single filters each with a different type of carbon.	--	--	--	Specify
Main Filter				
Particulate	A self-contained filter designed to physically capture particles larger than 0.3 microns (HEPA) or 0.12 microns (ULPA).			
	Specify	Specify	Specify	Specify
Safety Filter				
Carbon or HEPA/ULPA	Optional safety filter of carbon or HEPA/ULPA adds an additional layer of protection.			
	Specify	Specify	Specify	--

This Product Exceeds OSHA, ANSI and Other International Standards.

The Multiplex filter configuration permits a customized combination of filter media for a broad range of chemical families and biological agents if required. Enhanced Filtration Technology (EFT broadens the Air Science application for ductless fume hoods.

An optional sliding sash permits easier access to the work surface in locations with tight horizontal clearance. See Accessories.

Optional cup sink must be specified when ordering.

ENHANCED FILTRATION TECHNOLOGY

The Air Science Enhanced Filtration Technology (EFT™) is a universal filtration system developed for use with a wide range of core chemical families. These include organic acids, alcohols, aliphatic hydrocarbons, aromatic hydrocarbons, esters, aldehydes, ketones, ethers, halogens and others. Although the EFT system is weighted to accommodate these families, it can handle inorganic acids as well.

The Air Science EFT system is available as an option on Air Science advanced ductless fume hoods, standard on Purair® ECO series fume hoods, and can be retrofitted on many Air Science ductless fume hoods already in service worldwide.

Independent Test Results

Independent testing confirms that the Air Science EFT system is superior in critical areas to other "green" fume hood systems recently introduced to the industry. AFNOR NF X 15-211 requires that three chemicals (isoproponal, cyclohexane and hydrochloric acid) be tested under very precise conditions to ascertain and establish retention capacity at 1% of the threshold limit value (TLV) for each chemical.

EDU FILTER

The high-efficiency filter used in the Air Science EDU is certified to absorb a range of chemicals commonly used in school curriculum associated with basic chemistry and environmental sciences.

Retention Capacity (grams) for a Single Module at 1% of the TLV (Threshold Limit Value)

Specification	AFNOR NF X 15-211	
Testing Laboratory	IBR	Intertek
Product Manufacturer	Air Science	Brand E
Filter Type	EFT	Green
Test Results		
Isopropanol (alcohol)	2052	673
Cyclohexane (aliphatic hydrocarbon)	1531	914
Hydrochloric Acid (inorganic acid)*	1205	2729*

**Based on "core" chemical families typically used in ductless fume hood applications, the Air Science EFT filter offers significant advantages over filters marketed as "universal" filters. On inorganic acids the EFT filter provides a lesser but more realistic usable capacity in that with moderate to heavy acid applications, all ductless fume hoods made of metal are subject to corrosion and rust. In those applications Air Science recommends its polypropylene or total exhaust hoods with a specially formulated heavy duty acid filter.*

AVOID REVOLVING FILTERS

Air Science strongly discourages the unsafe practice of revolving secondary back-up filters into the primary filter compartment. All Air Science units are designed to avoid this false sense of security.

In a revolving filter system, users are instructed to rotate the secondary back-up filter into the primary filter position after non-permissible exposure levels of chemicals are detected within the monitoring chamber.

Depending on when the unit can be properly shut down, the secondary filter can be loaded to the point of saturation itself, thereby creating a safety hazard if the filter is considered new.

If a new spare filter is not immediately available, a user may inadvertently (or knowingly) re-install a contaminated primary filter into the secondary location permitting the system to operate without protection.

Additionally, the secondary filter can become contaminated as it ages, sometimes for years, on top of an operational cabinet, losing filter efficiency by the time it is installed.

Either practice puts both personnel and the environment at risk, even though some manufacturers provide stickers to label the filters as "used".

The Air Science non-revolving filter practice ensures that only a new filter is fitted into the primary filter compartment, and permits the secondary filter to remain installed for at least twice the change-out period, resulting in a 50% savings in filter change-out costs.

FILTER SUMMARY

Formula	Description
GP Plus!	The most widely used filter in the range, primarily for solvent, organic,and alcohol removal.
ACI Plus!	Neutralizes volatile inorganic acid vapors.
ACR	Iodine and methyl iodide vapors. It is frequently used for iodination reactions with low level radioactive iodine.
ACM	Mercury vapor.
AMM	Removes vapors from dilute ammonia solutions and to remove low molecular weight amines.
SUL	Designed to remove hydrogen sulphide and low molecular weight mercaptans.
CYN	Removal of hydrogen cyanide. Many cyanide compounds will evolve HCN gas if acidified, so this filter is normally specified if working with any cyanide compound.
FOR	Designed to oxidize formaldehyde and glutaraldehyde fumes. It is widely used in hospital pathology laboratories.
ETH	Diethyl ether is adsorbed on activated carbon, but because of its low boiling point, local heat adsorption can reduce the capacity of the filter. Special impregnation allows a chemical reaction which increases the filter capacity.
EDU	Designed to handle chemicals normally used in a university level chemistry curriculum.
MIL	As the name implies, this filter is designed for military applications involving war gasses.
HEPA/UPLA	Powders and particulates.
EFT	Universal filtration.

EDU® MOBILE AIRFLOW PATTERN

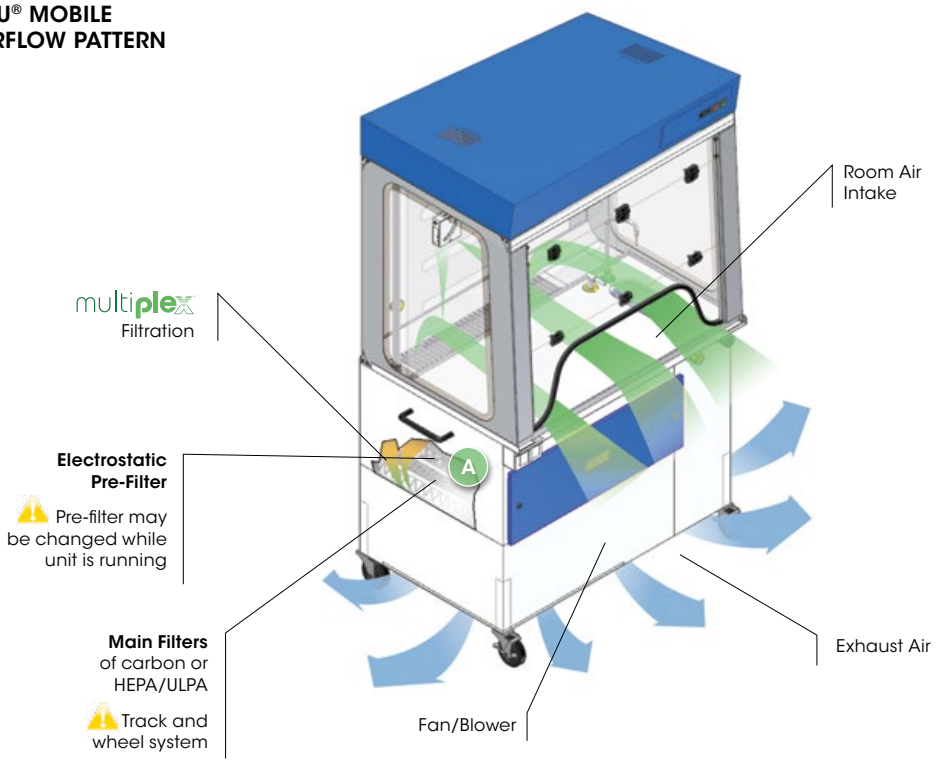

EDU-MOBILE, EDU-M-40 shown with Multiplex filtration system.

The EDU-MOBILE maintains a constant face velocity of 100 FPM in compliance with U.S.A. and International standards for safety and performance. Contaminated air is pulled through the Multiplex filtration system where activated carbon adsorbs chemical vapors, returning clean air to the room.

Low height and low center of gravity for stability when moving.

A. The main filter is easy to replace; no tools required. The filter clamps tightly against the filter gasket to prevent filter bypass and to maintain filter integrity.

EDU® CLASSIC AIRFLOW PATTERN

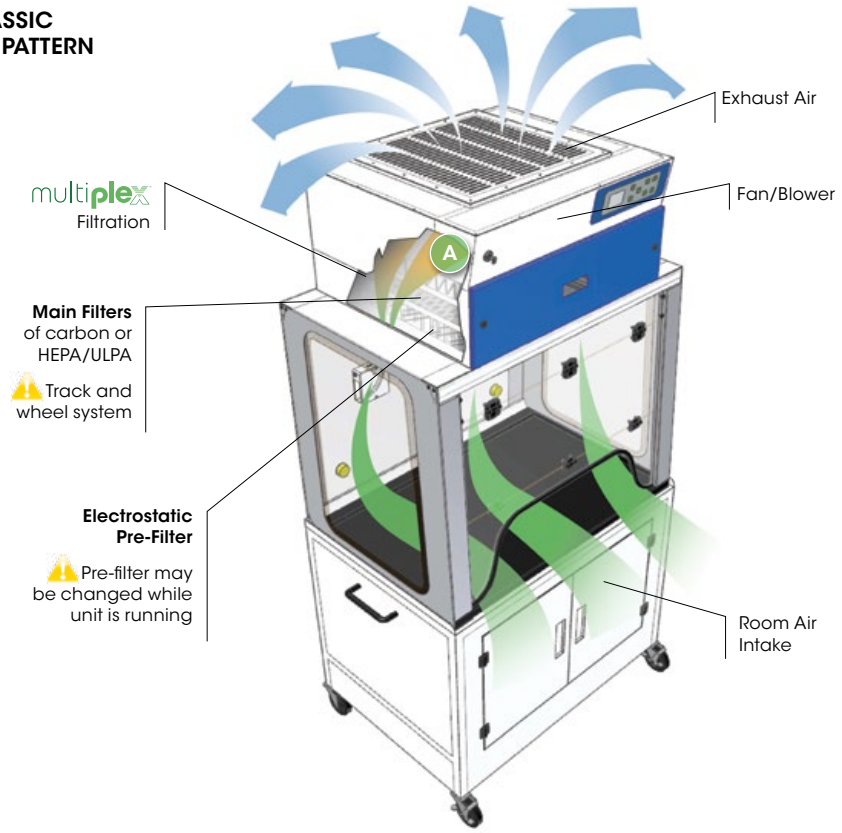

EDU-CLASSIC, P15-ENCB shown with Multiplex filtration system.

The EDU-CLASSIC maintains a constant face velocity of 100 FPM in compliance with U.S.A. and International standards for safety and performance. Contaminated air is pulled through the Multiplex filtration system where activated carbon adsorbs chemical vapors, returning clean air to the room.

A. The main filter is easy to replace; no tools required. The filter clamps tightly against the filter gasket to prevent filter bypass and to maintain filter integrity.

EDU® ADA AIRFLOW PATTERN

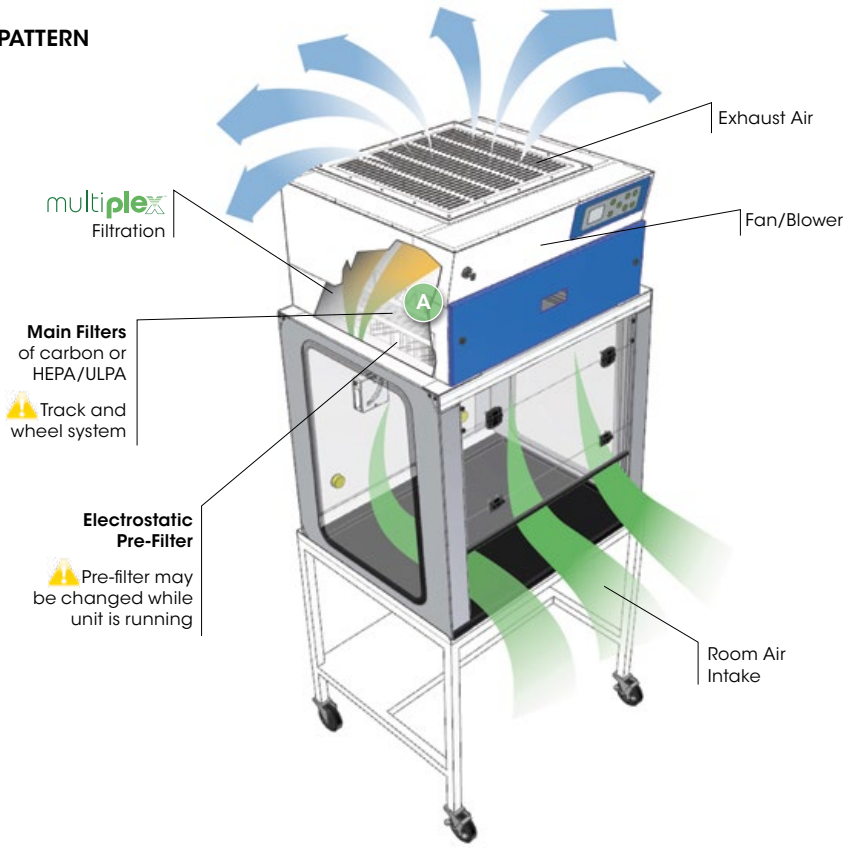

EDU-ADA, P10XL-CART-RC-P shown with Multiplex filtration system.

The EDU-ADA maintains a constant face velocity of 100 FPM in compliance with U.S.A. and International standards for safety and performance. Contaminated air is pulled through the Multiplex filtration system where activated carbon adsorbs chemical vapors, returning clean air to the room.

A. The main filter is easy to replace; no tools required. The filter clamps tightly against the filter gasket to prevent filter bypass and to maintain filter integrity.

EDU® JUNIOR AIRFLOW PATTERN

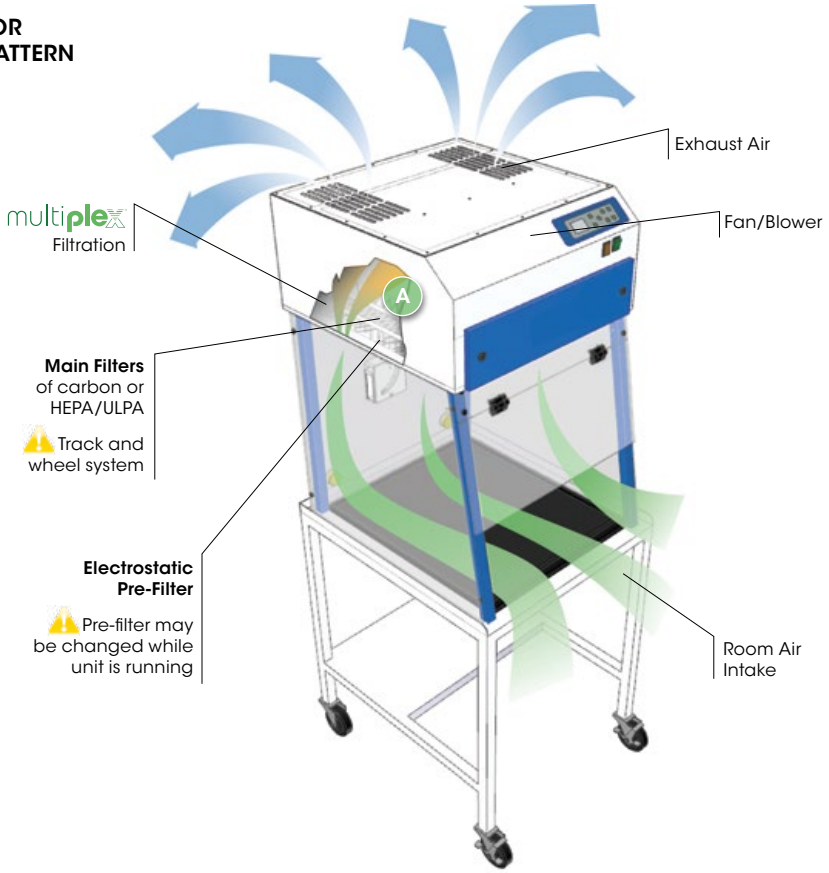

EDU-JUNIOR, P5-24XT-CART shown with Multiplex filtration system.

The EDU-JUNIOR maintains a constant face velocity of 100 FPM in compliance with U.S.A. and International standards for safety and performance. Contaminated air is pulled through the Multiplex filtration system where activated carbon adsorbs chemical vapors, returning clean air to the room.

A. The main filter is easy to replace; no tools required. The filter clamps tightly against the filter gasket to prevent filter bypass and to maintain filter integrity.

EDUmobile™

The EDU-MOBILE is mounted on a wheeled cart with a small side storage compartment. Blowers, filters and controls are mounted beneath the work surface to lower the center of gravity and simplify moving from room to room.

Model EDU-MOBILE, EDU-M-40 shown

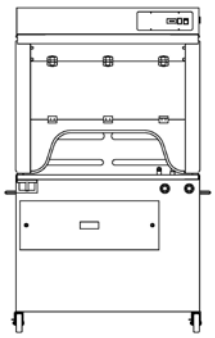

EDU-M-40

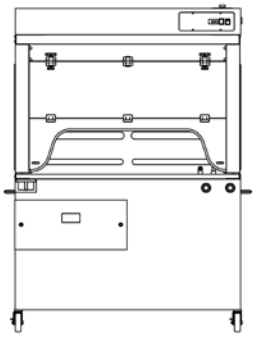

EDU-M-48

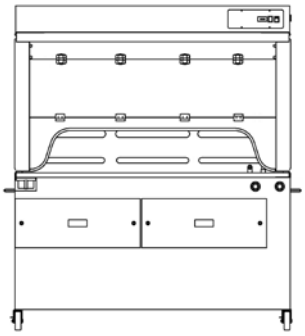

EDU-M-60

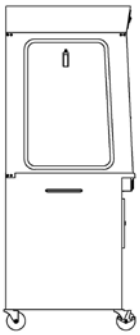

Side View

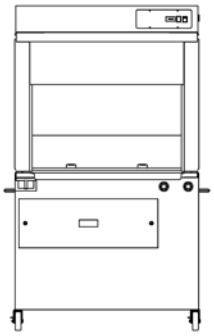

EDU-MOBILE
(optional sliding sash)

MODEL	DIMENSIONS			WEIGHT (lbs/Kg)	
	Internal Height	External (W x D x H)	Shipping (W x D x H)	Net	Ship
EDU-MOBILE					
EDU-M-40	31.5" 800 mm	39.5" x 28.5" x 77.5" 1003 x 724 x 1968 mm	40" x 50" x 80" 1016 x 1270 x 2032 mm	270 / 123	320 / 145
EDU-M-48	31.5" 800 mm	49.5" x 28.5" x 77.5" 1250 x 724 x 1968 mm	40" x 60" x 80" 1016 x 1524 x 2032 mm	370 / 168	420 / 191
EDU-M-60	31.5" 800 mm	59" x 28.5" x 77.5" 1500 x 724 x 1968 mm	40" x 70" x 80" 1016 x 1778 x 2032 mm	470 / 213	520 / 236

Specifications are subject to change without notice.

EDUclassic™

The EDU-CLASSIC has horizontal inflow with top mounted filters and exhaust. This model is mounted on a wheeled cart with an enclosed chemical storage area in the cabinet base.

Model EDU-CLASSIC, P15-ENCB shown

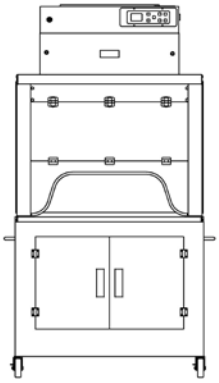

EDU-CLASSIC

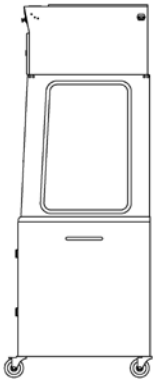

Side View

MODEL	DIMENSIONS			WEIGHT (lbs/Kg)	
	Internal Height	External (W x D x H)	Shipping (W x D x H)	Net	Ship
EDU-CLASSIC					
P15-ENCB	31.5" 800 mm	39.5" x 28.5" x 83.5" 1003 x 724 x 2121 mm	40" x 50" x 80" 1016 x 1270 x 2032 mm	270 / 123	320 / 145

EDUada™

The EDU-ADA permits wheelchair access to the workstation. Controls are mounted in a handheld remote box that can be placed adjacent to or inside the work area.

Model EDU-ADA on mounting stand. Stand can be fitted with optional adjustable height legs (shown) or optional mobile locking casters.

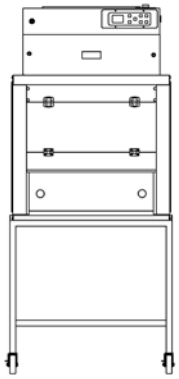

EDU-ADA

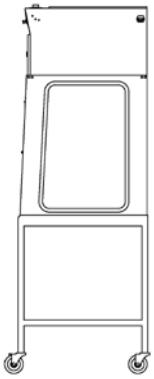

Side View

MODEL	DIMENSIONS			WEIGHT (lbs/Kg)	
	Internal Height	External (W x D x H)	Shipping (W x D x H)	Net	Ship
EDU-ADA					
P10XL-CART-RC-P	31.5" 800 mm	34" x 28.5" x 83.5" 864 x 724 x 2121 mm	40" x 40" x 80" 1016 x 1016 x 2032 mm	234 / 107	284 / 129

Specifications are subject to change without notice.

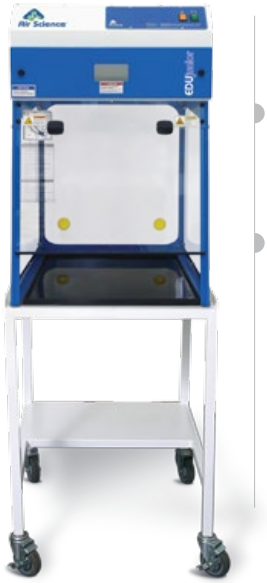

EDUjunior™

The EDU-JUNIOR is a basic workstation mounted on a wheeled cart.

Model EDU-JUNIOR, P5-24XT-CART shown

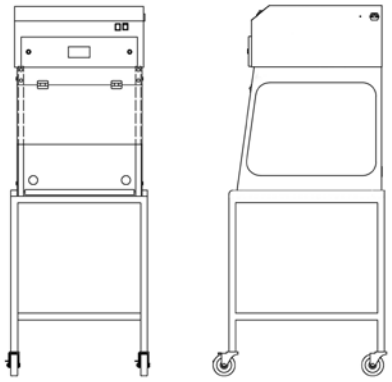

EDU-JUNIOR Side View

MODEL	DIMENSIONS			WEIGHT (lbs/Kg)	
	Internal Height	External (W x D x H)	Shipping (W x D x H)	Net	Ship
EDU-JUNIOR					
P5-24XT-CART	24" 610 mm	24" x 27" x 70" 610 x 686 x 1778 mm	40" x 40" x 80" 1016 x 1016 x 2032 mm	176 / 80	225 / 102

Specifications are subject to change without notice.

PRODUCT SPECIFICATIONS

EDU Model	EDU-MOBILE	EDU-CLASSIC	EDU-ADA	EDU-JUNIOR
Airflow CFM	220	220	145	135
Face Velocity FPM	100	100	100	100
Lighting	<··· Compact fluorescent lamp. ···>			
Construction	<··· White epoxy steel frame and head unit, Clear sides and back panel. ···>			
Blower	<··· ebmpapst centrifugal fan. ···>			
Electrical	<··· 120V, 60Hz or 230V, 50Hz voltages available. Specify when ordering. Other voltage options available. ···>			
Electrical Switches	<··· Main On/Off. ···>			
Monitoring	<··· Low airflow alarm, standard. ···>			

Filter Specifications

Pre-Filter	<··· Electrostatic, 1 lb / 0.45 kg (nominal). ···>	
Main Filter	22 lbs / 9.6 kg (EDU-M-48 and EDU-M-60 require two main filters)	11 lbs / 5 kg

OPTIONS AND ACCESSORIES

EDU Model		EDU-MOBILE	EDU-CLASSIC	EDU-ADA	EDU-JUNIOR
Filter Saturation Alarm*	An electronic gas sensor emits audio and visual alerts when the main filter needs to be changed.	FSA	FSA	FSA	FSA
Monitair Controller*	Microprocessor controller monitors and displays cabinet operating parameters, airflow, containment, and filter condition; emits audio and visual alerts if conditions become unsafe, all on LCD display.	MON-P	MON-P	MON-P	N/A
Polypropylene Construction*	Cabinets are available in all polypropylene construction. Contact Air Science for information.	EDU-M-40-PP EDU-M-48-PP EDU-M-60-PP	P15-ENCB-PP	P10XL-CART-RC-P-PP	P5-24XT-CART-PP
Duplex Electrical Outlet*	Two NEMA 14-20R receptacles with ground fault interrupter. 110V service standard; international fixtures available.	AS-GFI	AS-GFI	AS-GFI	AS-GFI
Service Fitting	Cabinets can be fitted with service fixtures such as petcocks, faucets or valves.	<··· SF-X. Specify service fitting type (faucet, valve, petcock) and location when ordering. ···>			
Cup Sink, Mounts into Tray*	Cup sink is fitted into the base tray.	SINK-P	SINK-P	SINK-P	SINK-P
Docking Station	Security cable is shorter than utility and power line. Prevents damage from accidental disconnect of utility services to mobile fume hoods. Prevents unauthorized access to main service connections which are securely locked when not in use. Configured with isolated single switch electrical sockets, USA or Euro, 15 amp. Can be recessed or flush mounted. Includes key lock, quick release connections for water, waste and gas. An optional RJ45 outlet is available. Specify outlet choice when ordering.	DOCK-S	DOCK-S	DOCK-S	DOCK-S
Sliding Sash	Vertical sliding sash permits easier access to the work surface when the mobile fume hood is used in limited space areas. Specify when ordering.	EDU-M-SS	P15-ENCB-SS	P10XL-CART-RC-P-SS	P5-24XT-CART-SS
Dual Access	Units can be fitted with dual access front and rear panels for applications where student access is required.	N/A	P15-ENCB-DA	P10XL-CART-RC-P-DA	P5-24XT-CART-DA

** Factory installed; specify when ordering.*

STANDARDS AND COMPLIANCE

Quality Management Systems	ISO 9001
Chemical Fume Containment	ANSI/ASHRAE 110-1995 SafeBridge® Performance Verification (VE)
Carbon Filter Efficiency	BS 7989:2001 AFNOR NF X 15-211
Biological Safety Filter Efficiency HEPA and ULPA	IEST-RP-CC-0034.2 IEST-RP-CC007.1 IEST-RP-CC001-4 EN 1822
Electrical Safety	UL-C-61010-1 CE Mark RoHS Exempt under EEE Category 9
Product Design	ANSI Z 9.5-2003 ANSI Z 9.7-1998
OSHA, Occupational Safety and Health Administration	OSHA Standard - 29 CFR, Safety and Health Regulations for General Industry, 1910.1450: Occupational exposure to hazardous chemicals in laboratories. Part B, definition, laboratory type hood. All Air Science products meet this definition.
Environment	ISO 14001 ENERGY STAR® Partner
Education (UK)	CLEAPPS® Instruction Approved (EDU-M)

Air Science®

120 6th Street • Fort Myers, FL 33907
T/239.489.0024 • Toll Free/800.306.0656 • F/800.306.0677
www.airscience.com

©2016 Air Science OW 10719 10/16
Air Science, EDUSeries, EDUmobile, EDUclassic, EDUada, EDUjunior, Multiplex, and EFT are all registered trademarks of Air Science Corporation.